The original Holy Cross Church in Dalby

New interpretations through digital archaeology

Martina POLIG

Lund University

Abstract: The Holy Cross Church in Dalby (Sweden) dates back to the 11th century, making it one of the oldest stone churches all across Scandinavia. The appearance of the original church has been discussed by the research community for about a century. The main aim of this study is to determine which of the many hypotheses regarding the first phase of the church is the most likely, what might have been the reason for its major alteration in the 12th century, and how digital methods – particularly 3D – can improve and aid building archaeology. The study consists of four parts. In the first one, excavation trenches close to the church are reconstructed from drawings in 3D-GIS and put in relation to a 3D model of the church derived from a laser scan acquisition of the entire building that was performed in 2013. It is an innovative way to assess and revisit old excavation material by recomposing vertical and horizontal 2D documentation accurately. Based on the results of the first part, other archaeological documentation, measurements from the 3D scan and literature, 3D reconstructions of the three most important hypotheses are created in the second part and are compared to the 3D scan of the church in order to validate them geometrically. An interactive reliability map of the reconstructions was created and made available online. The last two steps comprised the spatial exploration of the reconstructions and an examination of the potential of structural analysis through FEM (Finite Element Modelling) for building archaeology. It was possible to determine which hypothesis is the most likely, and that the alteration of the church in the 12th century might have been due to structural reasons. The study clearly shows that 3D methods can considerably enhance building archaeological investigations, and that FEM is a very promising method.

Keywords: 3D reconstruction, 3D GIS, FEM, 3D Hop, Romanesque architecture

Introduction

This study is an attempt to move beyond the use of 3D material for mere digital preservation or communication and focuses on how it can actively enrich and improve building archaeological analysis and research. In the last decades we have seen many projects in which buildings have been scanned, with the purpose to make an accurate acquisition of a structure in a specific moment in time and to create traditional 2D documentation (plans, sections, orthophotos) (JONES 2011). When 3D material is not created through different means of digital acquisition such as photogrammetry or laser scanning and made from scratch it is often used for reconstructions of increasing complexity and dimension, frequently with the purpose of communication with the general public such as the “Rome Reborn” project (DYLLA et al. 2009).

However, 3D models themselves can be used as a tool during the investigation process of a building because of their capacity in visualization. Spatial relationships within a building and also between a building and its

surroundings can be explored more easily. Due to the flexibility of the virtual space it is ideal to test hypotheses. Several case studies could reach important conclusions only by modifying a model or its surroundings, moving, deleting or adding parts (BARACCHINI et al. 2004, PATAY-HORVÁTH 2014).
The possible applications of 3D models do not stop at a mere visual or geometrical analysis and can go far beyond. In fact, a variety of 3D software are able to perform complex analysis and simulations with 3D models, which help to gain a deeper understanding of a building. Applications can range from the combination of a custom-designed database and 3D models in the virtual environment of a 3D GIS (VON SCHWERIN et al. 2013, BERGGREN et al. 2015), to the simulation of thermal and light conditions in a building (OATELAAR 2013, VITO PORCELLI et al. 2013) or the movement and behavior of people within a structure (PALIOU 2014).
This paper is in line with these recent developments and presents an innovative combination of methods which address open questions regarding the first phase of the Romanesque Holy Cross Church (Fig.1) in Dalby (Sweden), one of the oldest standing stone structure in Scandinavia (ANJOU 1930). The research community has reached a standstill where traditional methods could not improve or enrich the discussions and open questions anymore. A variety of new methods employing 3D material of the church in different manners (3D GIS, 3D modelling, validation of 3D reconstruction, Finite Element Modelling) was used to reach new interpretations.

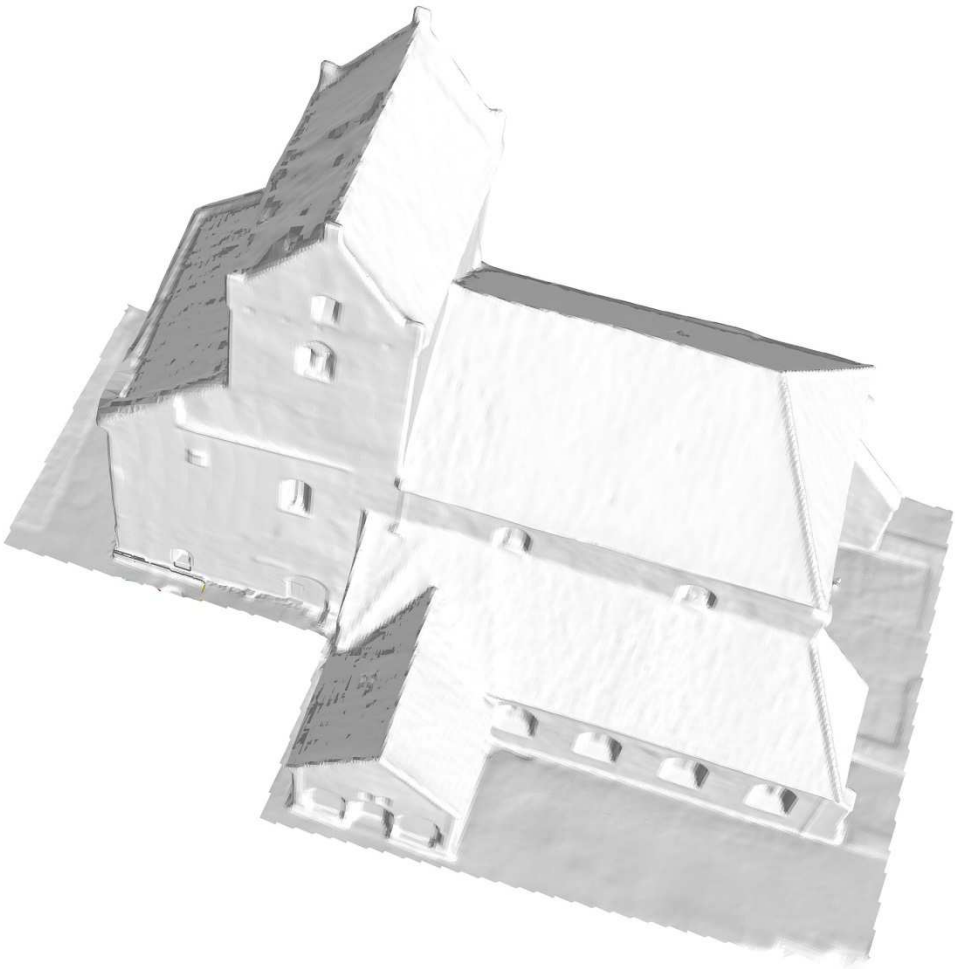

Fig. 1 – 3D model of the church as it is today created from a point cloud from a laser scanner. (Source: MeshLab)

The Holy Cross Church

The Holy Cross Church in Dalby (Sweden) dates back to the 11th century. Parts of the original church are still present in the nave of the building that we can see today, even though it has been changed many times throughout its history (WIENBERG 2012). Excavations in and around the church could determine that in its first phase the church was a simple three aisled basilica with a square shaped chancel and two side aisled with arcades dividing it from the central nave (Fig.2). However, it was not possible to investigate the western part of the church where a tower was erected in the 12th century. The ground floor of this tower, called by local research community “crypt”, is still preserved and made extensive excavations in this area impossible (ANJOU 1930). As a consequence of this lack of information regarding the original western end of the church many hypotheses about its appearance were developed.

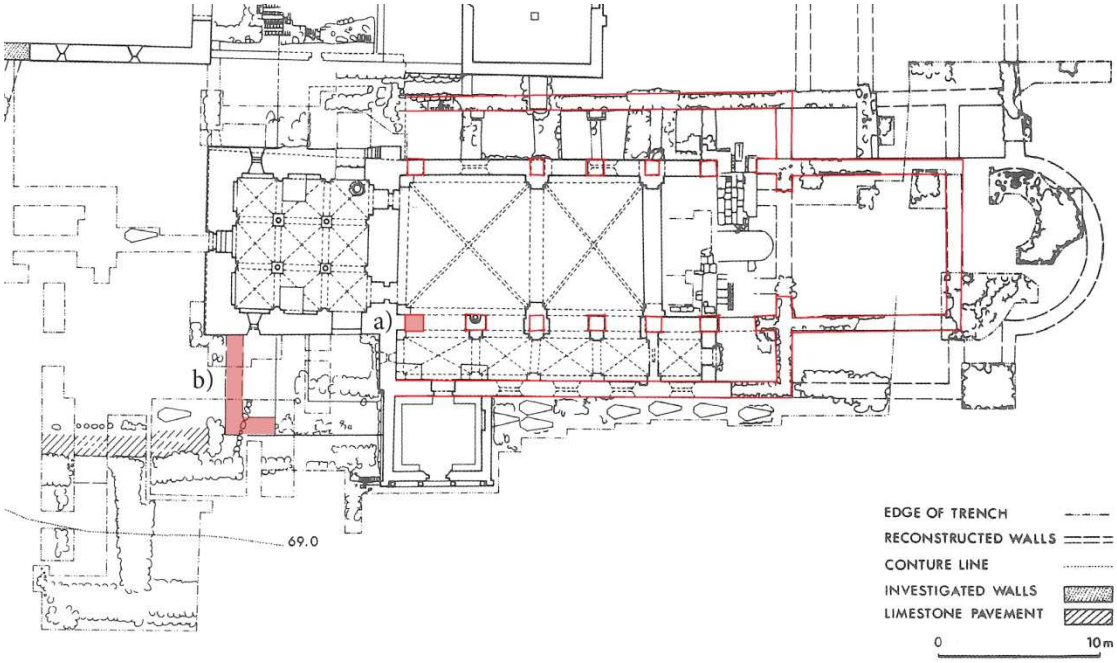

Fig. 2 – Compilation of the excavation maps from 1919 till 1982. Outlined in red is the three-aisled basilica of the first phase of the church; in red a) wall pillar proven to have been free standing and b) the “L-wall” (Source: part of plate 1 in: Borgehammar & Wienberg, 2012, modified by the author)

The two most important clues to the original church in the west is a pillar (Fig.2a) and an L-shaped wall remnant (hence called “L-wall”) (Fig.2b). An investigation of the westernmost wall pillar between the southern side-aisle and the nave could determine that it used to be freestanding (ANJOU 1930). Thus, the original church had at least one more arcade towards the west and the nave was shortened in the alteration of the 12th century. The other clue, the L-wall, was found in an excavation in the 1960‘s and was dated to the same century as the original church. This and the fact that it was built in the same manner as the foundations of the rest of the original church was interpreted as a sign that it belonged to the first phase of the church (WELIN 2012). However, a recent study claimed that the orientation of this wall in Fig. 2 and similar plans, which show it in a straight angle to the church, is wrong and that older drawings would depict it differently. In consequence,

rather than a part of the church the L-wall would be in reality part of a building in front of the church (LOVÉN, n.d.).

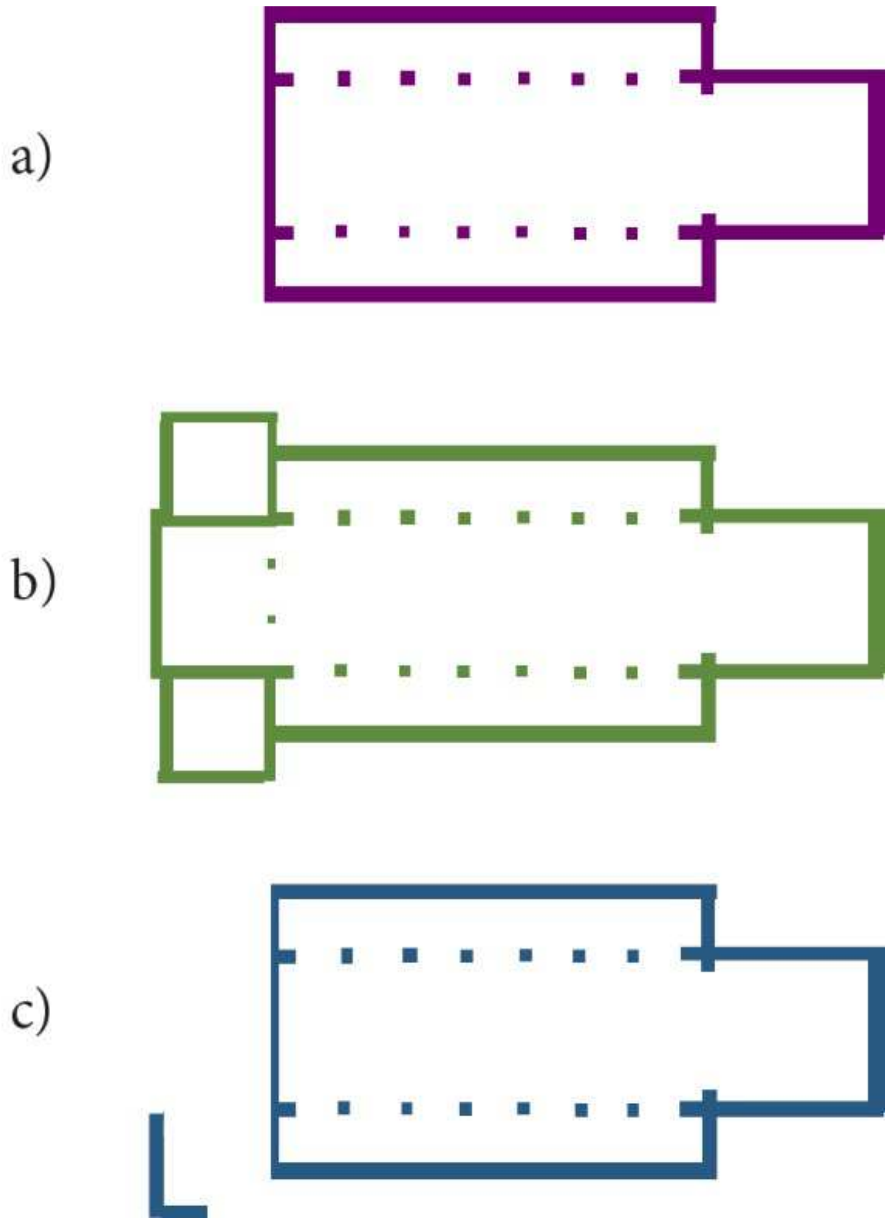

Fig. 2 – The three most important hypotheses regarding the first phase of the church: a) "straihgt-end-basilica", b) "narthex-basilica", c) "unfinished-basilica" (Source: created by the author)

In the last century, three important hypotheses were developed regarding the original outline of the church. The oldest one, which was established after the first large excavation in 1919, will be called in this study the „straight-end-basilica“(Fig.3a). In this hypothesis, the church is a three-aisled basilica with one additional arcade (8 pillar pairs in total) and finishes in the west with a simple straight gable wall (ANJOU 1930). The L-wall is not explained because it was not discovered yet. In the second hypotheses, the “narthex-basilica” (Fig. 3b), the church ends in the west in a narthex, a tower like construction typical for Romanesque churches. The L-wall is incorporated as a foundation wall of one of the side towers (WELIN 2012). According to the last hypotheses and the most recent, the “unfinished-basilica” (Fig. 3c), the construction of the church was stopped

after the 8th pillar and never finished. It just received a wooden gable wall as a west-end and the L-wall is a building of unspecified shape in front of the church (LOVÉN n.d.).
The main purpose of this study was to determine which one of those hypotheses is the most likely and what might the reason for the alteration of the west-end in the 12th century be.

The methodological pipeline and its results

The study was carried out in four steps and since each depends on the previous one the results are discussed as well after each step. In the first step, the excavation from the 1960‘s, and specifically the area in which the L-wall was discovered, was reconstructed in 3D to determine the position and orientation of this wall. A necessary step to find out whether the L-wall could have been part of the church or if it had to be a separate building in front of the church.
The second step involved the 3D modelling of the different hypotheses, the geometrical validation of the models and the creation of an interactive 3D reliability map to communicate the different source material used for the reconstructions.
In the following step the 3D models were spatially explored in different ways and in the last step a structural analysis through Finite Element Modelling (FEM) was performed, in order to investigate a possible reason for the alteration of the 12th century and the destruction of the original west end.

Reconstruction of the excavation

Since it was claimed that the most used excavation maps of the church are not reliable it was necessary to use the very first documentation of the L-wall for the reconstruction in order to avoid mistakes that might have been introduced when the maps were assembled. The oldest documentation of the L-wall and its surroundings, 1:20 drawings made in the field (ANDERSSON 1970), were digitized and drawn in the software AutoCAD from Autodesk (“Auto-CAD” 2015), which is a CAD (Computer Aided Design) software for 2D and 3D design and documentation, taking into account also height measurements on single stones. These drawings were then aligned with each other, using a 3D model of the church as a reference. The alignment was performed in the 3D GIS ArcScene, an extension of the ESRI’s ArcGIS used for creating, visualizing, and analyzing data in a three-dimensional (3D) context (“ArcGIS 3D Analyst” 2015). The 3D model used was created in the software MeshLab (CIGNONI et al. 2008) from a point cloud derived from a laser scan acquisition of the church performed in 2013 by the Humanities Laboratory of Lund University with a Faro high-speed terrestrial laser scanner.
The geometrical accurate 3D model is so detailed that it allows to distinguish single stones that appear also in some of the drawings from the excavation, making thus an alignment of 3D and 2D documentation possible (Fig. 4a). Other plans and sections were aligned by cross-referencing them with stones that appear on both drawings that have to be aligned or with the help of original photographs (Fig. 4b). In this way, the excavation scene was recomposed in an accurate manner (Fig. 4c).

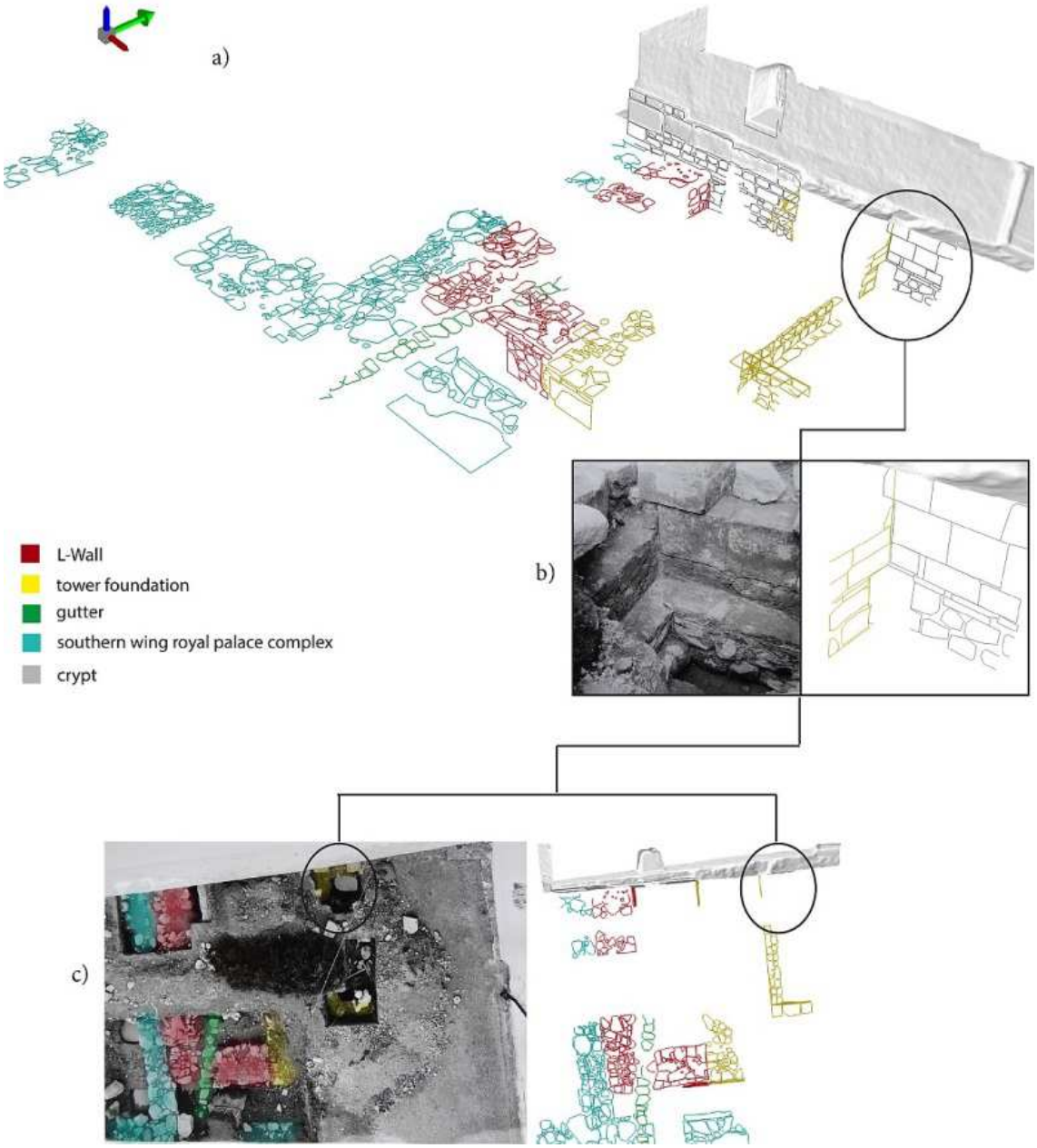

Fig. 4 – a) Reconstruction of the excavation scene from the 1960's (Source: 2D export from ArcScene). b) Alignment of two sections with the help of a photograph from the excavation (Source: Photograph from the LUHM and 2D export from ArcScene). c) the excavation scene from above (Source: Photograph from the LUHM colored by the author and 2D export from ArcScene).

The finished reconstruction was exported together with the plan of the church to keep the spatial relationship between them and imported in AutoCAD for measurements and to be used in the next step in 3D modelling. Measuring the angle between the L-wall and the church it could be seen that the angle between the longer section and the church deviates by two degrees from a straight angle (Fig. 5). The shorter section, however, is perfectly parallel to the church. Even though the wall is not in a perfect straight angle to the church it could still have been part of it since the deviation is very little, as it was also proven in next step.

Fig. 5 – Orientation of the L-wall with the trenches colored differently according to their assigned roman number. The longer section of the wall is 92° pivoted relativly to the orientation of the church. The shorter section is parallel. (Source: AutoCad)

3D modelling

Since it was possible to determine that the “narthex-basilica” is a valuable option, all three hypotheses were reconstructed in 3D in the software AutoCAD, as well as the L-wall in its possible different shapes as a building. The source material used derived from excavations, building archeological investigations and the literature. Parts that do not base on such information were modelled according to style coherence and the internal logic of the building. Since the reconstructions focus on the overall structure, they are not very detailed and do not show architectural decoration (Fig. 6).

In order to test whether the 3D reconstructions are reliable for spatial exploration their geometrical accuracy was validated. They were imported into the software MeshLab, where they were aligned and compared with the point cloud of the laser scan of the church. The focus was on the nave, which in great parts dates back to the 11th century and thus was suitable for a comparison and had as a result that the models match the point cloud.

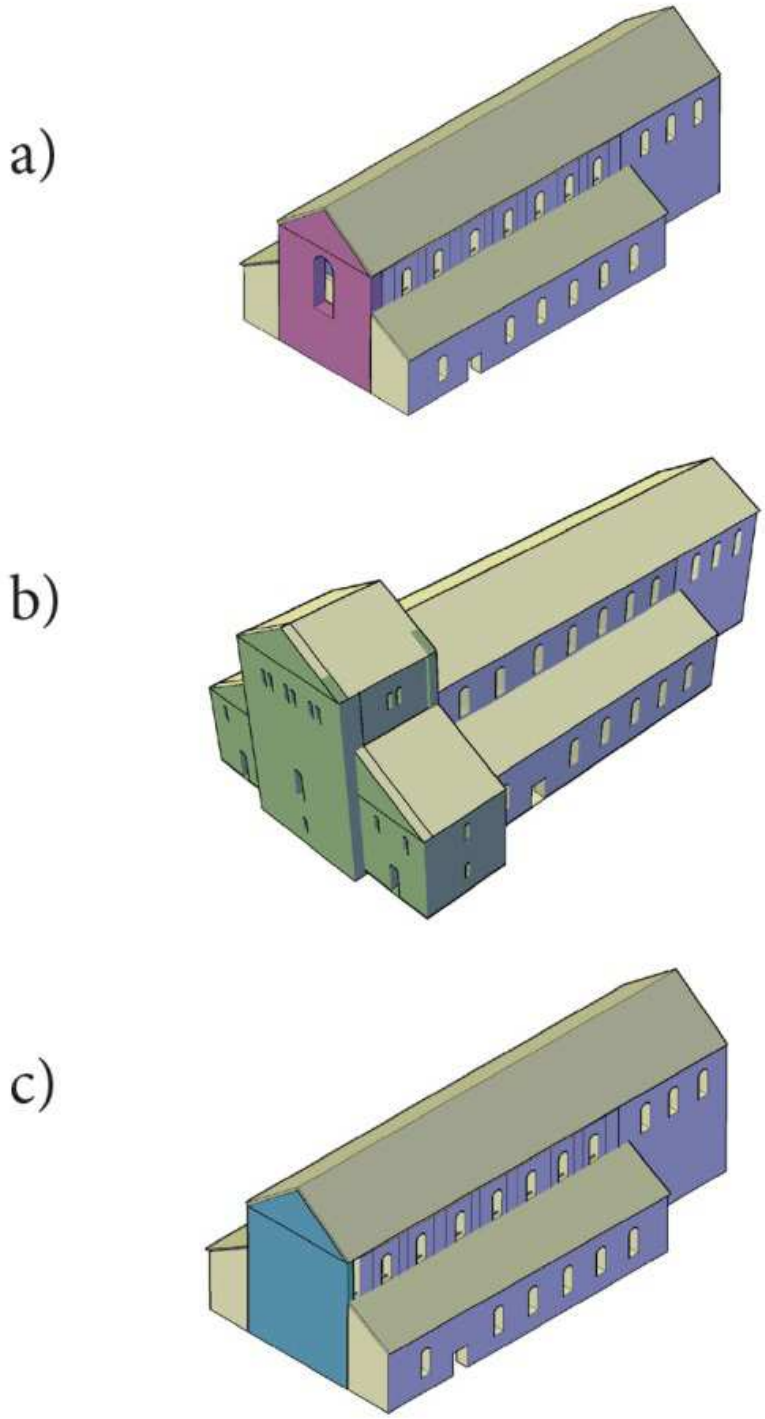

Fig. – 3 3D models of the three hypotheses: a) "straight-end-basilica", b) "narthex-basilica", c) "unfinished-basilica"

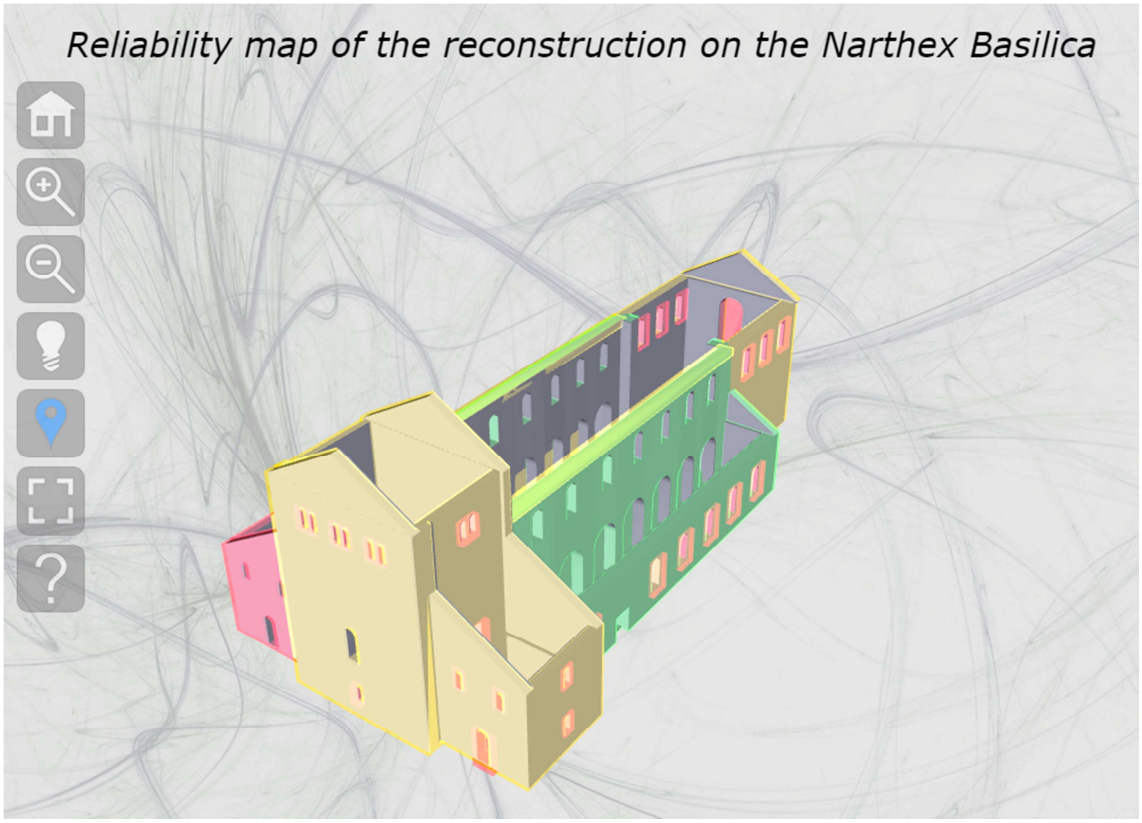

Fig. 4 – Reliability map of the reconstruction with 3DHop (Source: screenshot from http://www.polig.eu/reliability_map/)

To meet the need to be transparent in the reconstruction process an interactive reliability map of one of the hypotheses was created (Fig. 7). The “narthex-basilica” was chosen because the central and eastern part of the three different models coincide and the other two differ in the western part only through a simple gable wall. The open software package 3D Hop was used, which was developed by the Visual Computing Lab in Pisa for the creation of interactive web presentations of 3D models (POTENZIANI et.al, 2015). The 3D model of the “narthex-basilica” is displayed on a webpage (http://www.polig.eu/reliability_map/) which is supported by the most common web browsers and functions without plug-ins, where a visitor can interact with the model in different ways (move, zoom, change the light, etc.). Activating hot spots the different parts of the building will become color coded according to their reliability and by clicking on them a new window will appear with additional information about the source material.

Spatial exploration

After the reliability of the reconstructions was tested sufficiently they were explored spatially. The relationship between der “straight-end-basilica” and the “unfinished-basilica” with the different possible shapes of the L-wall as a building was investigated (Fig. 8) as well as with other wall remnants unearthed during the excavation in the 60’s (Fig. 10). It was not necessary to include also the “narthex-basilica”, where the L-wall is incorporated directly in its structure. In addition, the relationship between the nave and the different versions of the west end was explored and the likeliness of an elongation of the nave by one, two or three arcades was assessed by modelling the potential elongation and testing its geometrical feasibility (Fig. 9). The inside of the

church was investigated in terms of accessibility and the effect of the different ground plans of the three models on the use of different elements within the church.

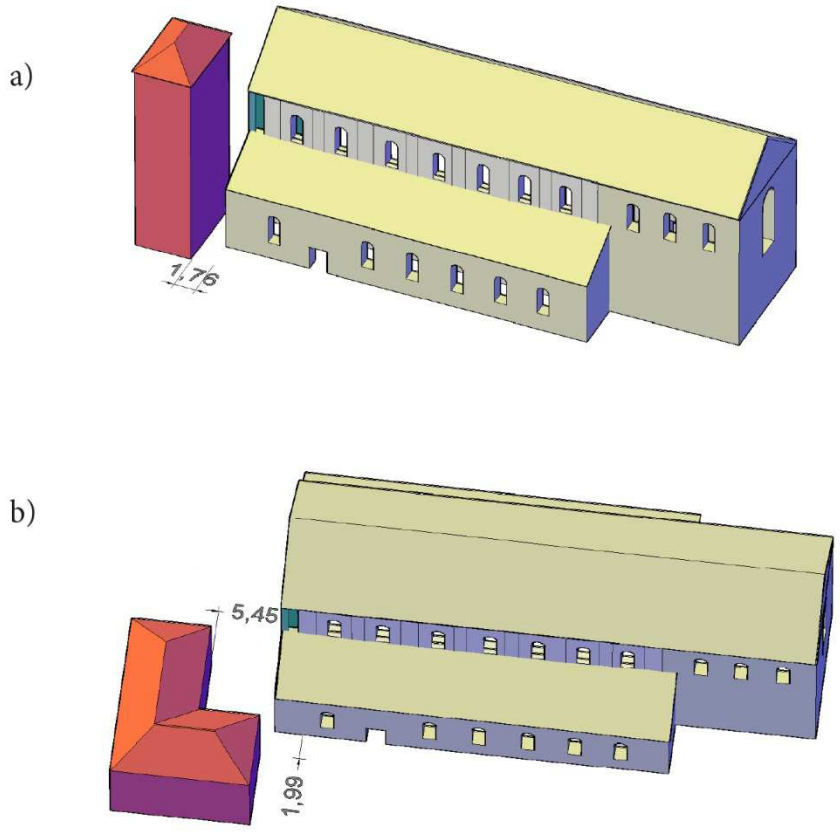

Fig. 5 – Spatial relationship between the L-wall as a tower a) and as a building in the shape of an "L" b) and the church. Source: AutoCad

The theory of the “unfinished-basilica” with the L-wall as building in front of the church could be excluded through the investigation of the elongation of the nave. If the original plan for the church was to have two or three additional arcades those would collide or almost collide with the L-wall as a tower or a building of another shape, making the “unfinished-basilica” thus not possible (Fig. 9). The “straight-end-basilica” does not explain the L-wall but since it is not included in the structure it has to be a tower or other building also in this version. The position of such a building in front of the church is somewhat awkward, leaving very little space between the two structures (Fig. 8) and blocking the view to the church. Considering also the fact that there was enough space around the church in the 11th century (LIHAMMER 2012) to position such a building differently, makes this theory less likely compared to the “narthex-basilica”. Looking also at the archaeological evidence in the ground no other wall remnants found so far can be associated with such a building (Fig. 10). Furthermore, a narthex as a west-end is much more typical for Romanesque churches (KUBACH 1975) than simple straight gable walls, strengthening the “narthex-basilica” theory, especially considering that they are typically associated with profane power and that there was most likely a royal palace opposite to the west-end of the church (CINTHIO 2006). Also the internal spatial exploration favors the “narthex-basilica” having as a

result that its ground plan seems more suitable for the use of different elements within the church (POLIG 2015).

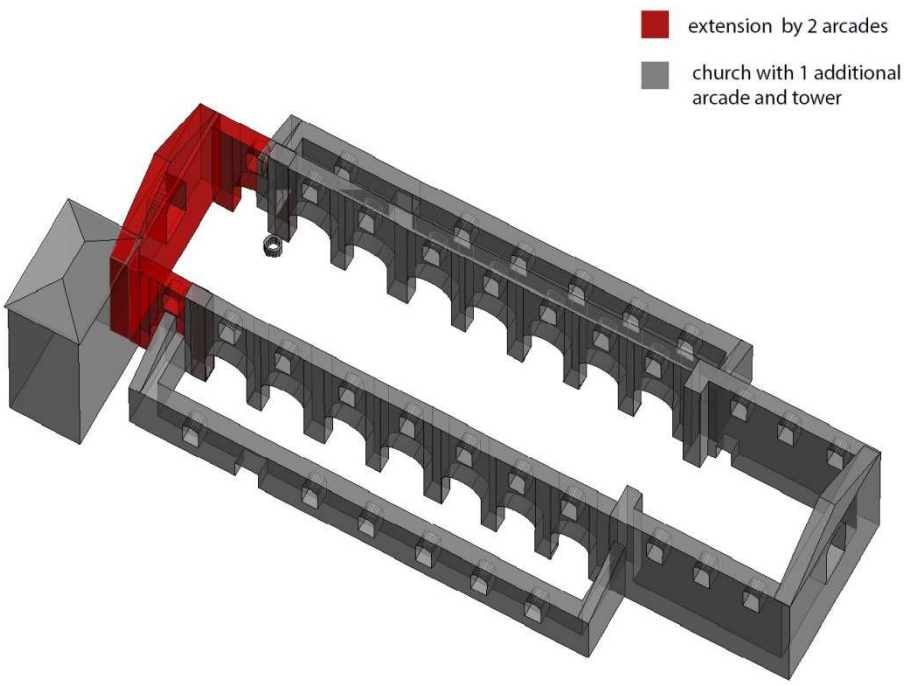

Fig. 9 – Elongation of the nave by two arcades with the L-wall as a tower in front of the church. (Source: AutoCad)

Fig. 10 – Excavation of the 1960's with the outline of the L-building on top of it. (Source: AutoCad)

Structural analysis

The conclusion of step number three was that the “narthex-basilica” is the most likely of the three hypotheses. The question about the reason for the alteration of the 12th century remained however unanswered. Several pieces of information point towards structural problems and thus it was decided to perform a structural analysis with FEM.

FEM was developed originally for and by engineers in the 1950’s and 1960’s with the purpose to simulate with special software how an object or building behaves when different types of loads and stress are applied to it (DEL COZ DIAZ et al. 2007). The first application in cultural heritage are from the early 1990’s and aimed at the structural assessment of important historical buildings such as the leaning tower of Pisa (MACCHI et al., 1993) or the Colosseum in Rome (CROCI, 1995). The method allows to assess the structural safety of a building or an architectonical element in a variety of situations. In the simplest only gravitational loads are considered, but also the effects of earthquakes, wind and soil settlement can be tested (ROCA et al., 2010). In this study the simplest type was performed through a “static stress with linear material models” analysis in the FEM software “Simulation Mechanical” from Autodesk (“Simulation Mechanical” 2015), a commonly used analysis to test general structural stability (MILES et al., 2013). The 3D model of the narthex created in AutoCad was imported in the software, where it had to be subdivided into smaller brick and tetrahedral elements- the so called finite elements (“Simulation Mechanical 2014. Learn & Explore. Brick Elements” 2015) (Fig. 11).

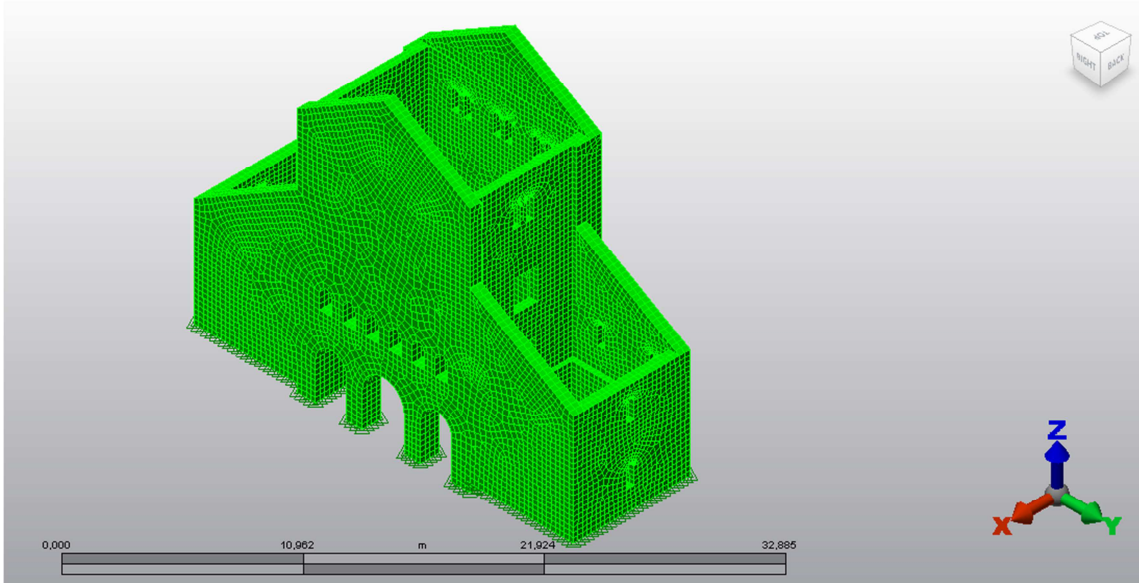

Fig. 11 – Subdivision of the 3D model into finite elements (Source: Simulation Mechanical)

Even though there are several possibilities to describe a structure with finite elements, this kind of description of the model was chosen because it is suitable for larger structures and provides a reliable description of the global structural behavior in case of a practice-oriented analyses (LAURENCO et al. 1995, ROCA et al. 2010). Fixed boundary conditions were applied on the bottom surfaces of the walls and pillars, where they would be connected to the foundations and thus have much less possibilities to move. This means that those surfaces

cannot change their position during the simulation process. In the next step material properties have to be assigned to the structure. Due to the absence of experimental values for the mechanical properties of the masonry that comes directly from the Holy Cross Church in Dalby it was decided to use the recommended values for this type of masonry (faced three-leaf-masonry) from the “NTC” (Norme tecniche per le Costruzioni, 2008) from the Italian government or more specifically the “Circolare 617/09” (Istruzioni per l’applicazione delle Norme Tecniche, 2009) (Table 1). After the materials were assigned, the gravitational loads were applied on the entire structure in direction of –Z and the simulation was run.

The output of the simulation shows how the structure is deformed and how stress is distributed in a visual and numerical way (Fig. 12). The positive values correspond to the tensile stress and the negative values to the compressive stress (MILES et al. 2013; “Simulation Mechanical 2014. Learn & Explore” 2015). The maximum value for the compressive stress is approximately 600 000 N/m2, which is far below the compressive strength of the used material of 2 000 000 N/m2, meaning that the structure can bear its own weight with this material.

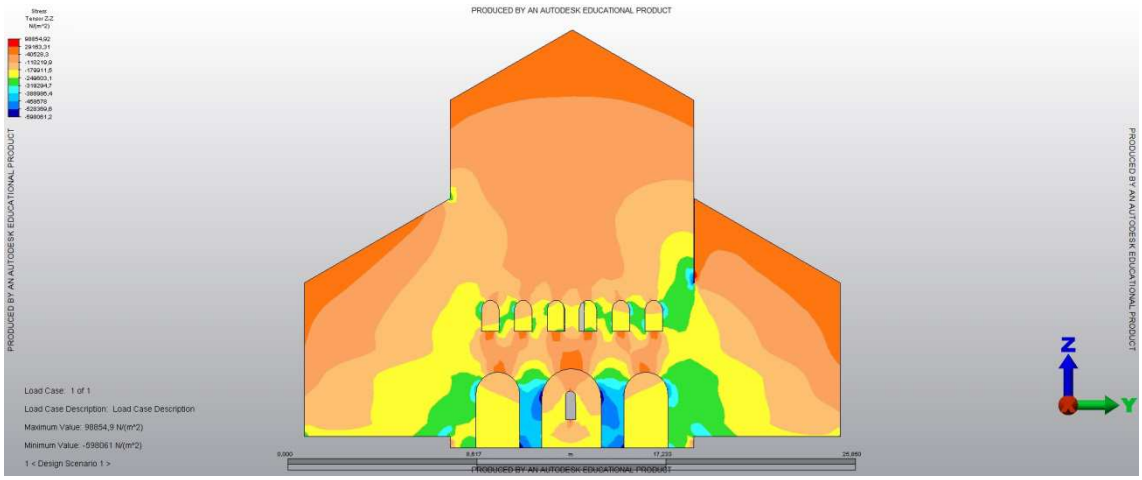

Fig. 12 – Result of the structural analysis (Source: Simulation Mechanical)

Even though the preliminary structural analysis has as a result that the structure was able to bear its own weight we have to consider that the recommended values for the mechanical properties of historical walls from the Circolare 617/09 are only reliable to a certain degree (ROMANO 2008). Destructive tests of faced three-leaf-masonry have shown that the compressive strength of such walls can also be less than 1 mil N/m2, which is quite different from the recommended value of 2-3 mil N/m2. The actual mechanical properties of a historical masonry can vary a lot depending on the unique composition of the walls and circumstances and environment in which they were constructed. There are some indicators that the real mechanical values and stability of the wall structure of the narthex in Dalby could be lower than the recommended values and that even though the structure was able to bear its own weight that there still might have been structural problems (POLIG 2015). Further research on this subject is though necessary.

Discussion

Every case study necessitates its unique methodology, depending on the questions we want to ask as well as on the material and circumstances we work with. In the case of Dalby a variety of different digital methods was applied in order to answer the research questions.

The reconstruction of the excavation from the 1960's made it possible to finish the dispute around the orientation of the L-wall in an objective manner. Whereas the digitization of old drawings from archaeological investigations and their use in a 2D GIS is nothing new, their assembly in the 3D space is. The reconstruction restores the three-dimensionality of an excavation which has been reduced with the classical documentation to the two-dimensional. It also restores the spatial relationship between plans and sections making them much more easy to read and at the same time bringing them in relation to the upper ground context such as a building. The use of the geometrical accurate 3D model as a reference for the alignment and reconstruction enables the assessment of the accuracy of old excavation plans, which is otherwise difficult to do. A major limitation of this method is that it can only be applied when there are still remains above ground that can be linked directly to the documentation. Sections and plans have to contain elements that are still visible on the surface and which are suitable for 3D modelling, allowing them to serve as a reference to correctly place the drawings in the virtual space.

A significant advantage of using digital methods is that very different typologies of source material could be translated, visualized, manipulated, and combined in the same space. This was also crucial for the modelling process, where a continuous dialogue between different source materials was possible, from drawings in different scales and from different origins to photographs and point clouds from laser scans.

Moreover, the 3D modelling has shown how it can be considered a place to think and explore due to the possibility to add and modify parts in the virtual space (for example adding more additional arcades). It makes it also necessary to think of details that are otherwise easily missed when an interpretation on how a structure looked like is made. The reconstructions aid the interpretation because a scenario becomes more concrete and palpable and less arbitrary. Human imagination, even though powerful, has its limits. Two persons will not envision exactly the same scenario when they imagine the same thing. For example in the case of Dalby, asking two persons to imagine that the L-wall is a tower very close to the church (Fig. 8) they will not have a problem creating that scene in their mind but most likely they will not have the same distance between the tower and the church. Having a 3D reconstruction not only ensures that everybody can "see" the tower in front of the church with the same distance to it, but also to measure this distance. A discussion becomes thus much more fruitful because everybody starts from the same basis. The possibility to work with measurements that are reliable and objective is extremely valuable and can give an interpretation much more weight. Because there is no scaling involved, they are also more accurate than measurements from traditional plans or sections.

With 3D modelling however, it is crucial to use reliable sources and base material and to possibly validate the reconstructions in an objective manner. In the case of Dalby this was possible through the comparison with the 3D scans of the church, which are geometrically accurate. Since there are different degrees of certainties behind the different parts of a model it is important to be transparent and to communicate them. 3DHop was a perfect tool in this regard because it allows to investigate the different models in an interactive manner. The web-viewer not only can be used to interrogate the model by clicking on different parts and receiving

information about this specific part and the sources used to model it, but is also a valuable tool to explore the models spatially.

Another benefit of 3D models consists in their flexibility and the possibility to update and modify the reconstructions according to new insides from discussions or the information from other analysis, such as for example the structural analysis. Finite Element Modelling has definitely potential in building archaeology if it is accompanied by an awareness of the limitations and difficulties that this method entails when it is applied to historical structures due to their heterogeneity in terms of geometry, morphology and materials (ROCA et al. 2010). Even if the mechanical properties of the materials are estimated and the geometrical and morphological representation simplified this method can be used to assess the general stability of a structure or the distribution of the stresses. Thus, it gives more validation to a 3D reconstruction and allows to test hypotheses from a structural point of view as we have seen in this case study and as it has been demonstrated in other case studies (MILES et al. 2013). If enough information is available about the mechanical properties it is also possible to conduct more complex analysis that are more realistic and incorporates also factors such as the vibration of bells or the weakening of the mechanical properties of the masonry through time.

Conclusion

This paper presents a methodological pipeline tightly connected to the research questions and the specific circumstances of the case study of Holy Cross Church in Dalby (Sweden). It could be contributed in several ways to the for decades ongoing discussion about the appearance of the first phase of the church. The reconstruction of the excavation of the 1960's in 3D enabled revisiting and reevaluating what was unearthed in this archaeological campaign. In this way the dispute about the orientation of the L-wall, crucial archaeological remain for the interpretation of the first phase, could be solved. Out of the three most prominent hypotheses, it could be concluded the "narthex-basilica" is the most likely by 3D modelling the different versions and performing spatial analysis on them. The question regarding the reason for the major alteration of the church in the 12th century was attempted to answer through Finite Element Modelling. Even though the structural analysis was not conclusive, it was still a valuable addition to the study highlighting the potential of this method and possible future applications. In every step of the study 3D material played a key role, illustrating how the application of 3D technologies can improve and enhance building archaeology.

References

ANDERSSON, K. (1970) Rapport över arkeologiska undersökningar väster om Dalby kyrka i Skåne, Bårhustomten. Lunds universitets historiska museum (LUHM).

ANJOU, S.G.A. (1930) Heliga korsets kyrka i Dalby samt de älsta kyrkorna i Lund, Roskilde och Odense: Undersökningar till 1000-talets arkitekturhistoria. Göteborg.

ArcGIS 3D Analyst [WWW Document] (06.2015) ESRI. URL http://www.esri.com/software/arcgis/extensions/3danalyst

AutoCAD [WWW Document] (06.2015) Autodesk. URL http://www.autodesk.com/products/autocad/overview

BARACCHINI, C., Brogi, A., Callieri, M., Capitani, L., Cignoni, P., Fasano, A., Montani, C., Nenci, C., Novello, R.P., Pingi, P. (2004) Digital reconstruction of the Arrigo VII funerary complex., in: VAST. 145–154.

BERGGREN, Å., Dell'Unto, N., Forte, M., Haddow, S., Hodder, I., Issavi, J., Lercari, N., Mazzucato, C., Mickel, A., Taylor, J.S. (2015) Revisiting reflexive archaeology at Çatalhöyük: integrating digital and 3D technologies at the trowel's edge, in: Antiquity 89, 433–448.

CIGNONI, P., Callieri, M., Dellepiane, M., Ganovelli, F., Ranzuglia, G. (2008) MeshLab:an Open-Source Mesh Processing Tool, in: Eurographics Italian Chapter Conference. The

Europraphics Association 2008.

CINTHIO, E. (2006) Minnen från Lund och Dalby. Lund : Art Factory.

CROCI, G. (1995) The Colosseum: safety evaluation and preliminary criteria of intervention.

Presented at the Structural Analysis of Historical Constructions - SAHC, Barcelona.

DEL COZ DÍAZ, J.J., García Nieto, P.J., Lozano Martínez-Luengas, A., álvarez Rabanal, F.P. (2007) Evaluation of the damage in the vault and portico of the pre-Romanesque chapel of San Salvador de Valdediós using frictional contacts and the finite-element method, in: International Journal of Computer Mathematics 84, 377–393.

DYLLA, Kimberly, Bernard Frischer et al. (2010) Rome Reborn 2.0: A Case Study of Virtual City Reconstruction Using Procedural Modeling Techniques, in: CAA 2009. Making History Interactive. 37th Proceedings of the CAA Conference March 22-26, 2009, Williamsburg, Virginia (Archaeopress: Oxford, 2010) 62-66

Istruzioni per l'applicazione delle Norme Tecniche (2009), Circolare n. 617.

JONES, D.M. (Ed.) (2011) 3D Laser Scanning for Heritage. Advice and guidance to users on laser scanning in archaeology and architecture, 2nd ed. English Heritage Publishing.

KUBACH, H.E. (1975) Romanesque architecture, History of world architecture. New York : Abrams, 1975.

LAURENCO, P.B., Rots, J.G., Blaauwendraad, J. (1995) Two approaches for the analysis of masonry structures: micro and macro-modeling, in: HERON 40 4 1995.

LIHAMMER, A. (2012) Dalby mellan vikingatid och medeltid, in: Borgehammar S. & Wienberg,

J. (Eds.), Locus Celebris : Dalby Kyrka, Kloster Och Gård, Centrum för Danmarksstudier: 28. Göteborg, 343-350.

LOVÉN, C., in print. Dalby kyrkas medeltida byggnadshistoria. Manuscript.

MACCHI, Ruggeri, M., Eusebio, M., Moncecchi, M. (1993) Structural assessment of the leaning tower of Pisa, in: Structural Preservation of the Architectural Heritage IABSE, 401–408.

MILES, J., Erkal, A., D'Ayala, D., Keay, S., Earl, G. (2013) Reconstruction of Ruined Archaeological

Structures Using Structural Analysis Methods, in: Archaeology in the Digital Era: Papers from the 40th Annual Conference of Computer Applications and Quantitative Methods in Archaeology (CAA), Southampton, 26-29 March 2012, 164–177.

Norme tecniche per le Costruzioni (2008), D.M. NTC.

OATELAAR, T.A. (2013) Reconstructing the Baths of Caracalla, in: Archaeology in the Digital Era: Papers from the 40th Annual Conference of Computer Applications and Quantitative Methods in Archaeology (CAA), Southampton, 26-29 March 2012.

PALIOU, E. (2014) Visibility analysis in 3D spaces: a new dimension to the understanding of social space, in: Paliou, E., Lieberwirth, U., Polla, S. (Eds.), Spatial Analysis and Social Spaces. De Gruyter.

PATAY-HORVÁTH, A. (2014) The virtual 3D reconstruction of the east pediment of the temple of Zeus at Olympia an old puzzle of classical archaeology in the light of recent technologies, in: Digital Applications in Archaeology and Cultural Heritage 1, 12–22.

POLIG, M. (2015) The Holy Cross Church of Dalby in the 11th century – New interpretations through digital archaeology, Master Thesis, Lund University

Roca, P., Cervera, M., Gariup, G., Pela', L. (2010) Structural Analysis of Masonry Historical Constructions. Classical and Advanced Approaches, in: Archives of Computational Methods in Engineering 17, 299–325.

ROMANO, A. (2008) Experimental Data and Guidelines for Stone Masonry Structures: a Comparative Review, in: AIP Conference Proceedings 1020, 745–752.

Simulation Mechanical 2014. Learn & Explore. Linear Results [WWW Document](06.2015) . Autodesk Knowl. Netw. URL http://knowledge.autodesk.com/support/simulationmechanical/learnexplore/caas/CloudHelp/cloudhelp/2014/ENU/SimMech/files/GUIDCC74503F-20E3-4969-8FFE-7778694BCC30-htm.html

Simulation Mechanical [WWW Document](06.2015) Autodesk. URL http://www.autodesk.com/products/simulation-mechanical/overview

VITO PORCELLI, Villa, F.C., Senabre, J.B. i, Torres, V.E., Chapaprìa, J.E. (2013) Integration of 3D Laser Scanning and Virtual Reconstructions as Research and Educational Tools for Representing the Past. The Case Study of Roman Baths of Edeta, in: Archaeology in the Digital Era: Papers from the 40th Annual Conference of Computer Applications and Quantitative Methods in Archaeology (CAA). Southampton, 26- 29 March 2012, 132–142.

VON SCHWERIN, J., Richards-Rissetto, H., Remondino, F., Agugiaro, G., Girardi, G. (2013) The MayaArch3D project: A 3D WebGIS for analyzing ancient architecture and landscapes, in: Literary and Linguistic Computing 28, 736–753.

WELIN, G. (2012) Dalby Kyrkas äldsta historia, in: Borgehammar, S. & Wienberg, J. (Eds.), Locus Celebris: Dalby Kyrka, Kloster Och Gård, Centrum för Danmarksstudier: 28 Göteborg.

WIENBERG, J. (2012) Mellan kungar och kaniker. Dalby till debatt, in: Borgehammar, S., Wienberg, J. (Eds.), Locus Celebris: Dalby Kyrka, Kloster Och Gård. Centrum för Danmarksstudier: 28, Göteborg, 19–53.

Imprint:

Proceedings of the 20th International Conference on Cultural Heritage and New Technologies 2015 (CHNT 20, 2015)

Vienna 2016

http://www.chnt.at/proceedings-chnt-20/

ISBN 978-3-200-04698-6

Editor/Publisher**:** Museen der Stadt Wien – Stadtarchäologie

Editorial Team: Wolfgang Börner, Susanne Uhlirz

The editor's office is not responsible for the linguistic correctness of the manuscripts.

Authors are responsible for the contents and copyrights of the illustrations/photographs.